AVERY DENNISON MARKETING SPECIFICATION

THE SUBJECT MATTER DISCLOSED HEREIN EMBODIES PROPRIETARY INFORMATION WHICH IS THE CONFIDENTIAL PROPERTY OF THE AVERY DENNISON CO. NONE OF WHICH SHALL BE COPIED, REPRODUCED, DISCLOSED TO OTHERS, PUBLISHED OR USED IN WHOLE OR IN PART, FOR ANY PURPOSE OTHER THAN THAT FOR WHICH IT IS BEING MADE AVAILABLE WITHOUT THE EXPRESS ADVANCE WRITTEN PERMISSION OF A DULY AUTHORIZED AGENT OF THE COMPANY. THIS DOCUMENT IS THE PROPERTY OF THE AVERY DENNISON CO. AND IS TO BE RETURNED TO THE COMPANY ON DEMAND.

HISTORY

REV.	DATE	DESCRIPTION
C	02.26.15	UPDATED TO NEW FORMAT; CHG DIM 8
D	02.24.17	ADDED SPECIAL CHARACTERISTICS 163.5mm WAS DIM 8 AND IS MADE REF. ALL BALLOONS AFTER 8 WERE RE-NUMBERED

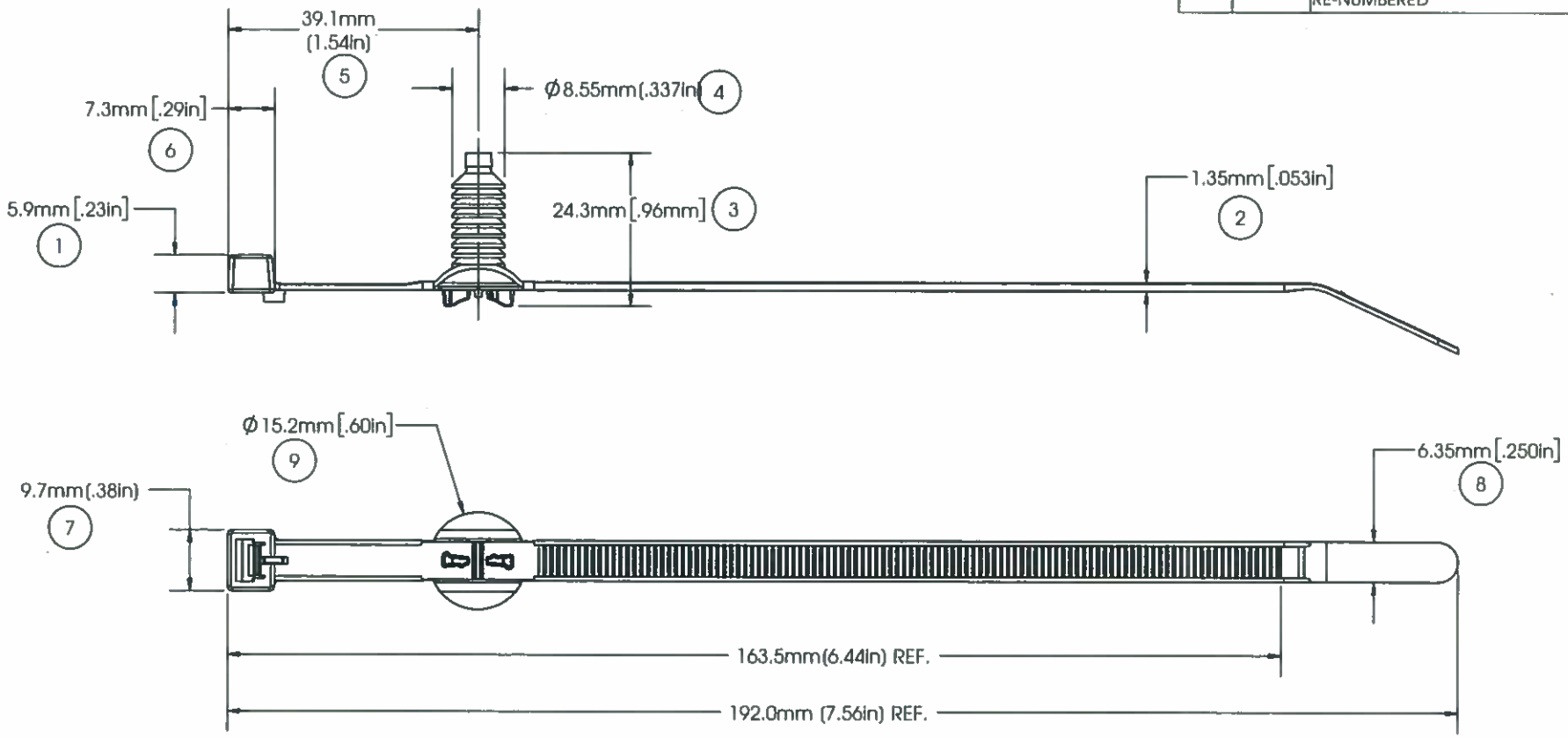

10	Δ FLAMMABILTY RATING:	HB RATING PER FMVSS302
11	Δ TENSILE STRENGTH:	50 LBF / 22.7 KGF MIN.
	APPLICATION:	6.4mm - 7.0mm HOLE
	OPERATING TEMP RANGE:	-40°F (-40°C) TO 220°F (105°C)
	WEIGHT:	2.1g
	BUNDLE DIAMETER:	Ø6.35mm TO Ø47.6mm
	TOOL:	12001 - HAND INSTALLATION TOOL 12500 - PNUEM. INSTALLATION TOOL
	TOOL TENSION SETTING:	6 - 8
	PACKAGING:	500/BAG, 10 BAGS/MASTER

NOTES:
1. Δ DENOTES A SPECIAL CHARACTERISTIC.

APPROVALS: ENG. APPR. 2/24/17
Q.A. APPR. 2/24/17

SPECIFIED TOLERANCES ARE:
.XX ± .03 IN. .X ± .7 mm
.XXX ± .010 IN. .XX ± .25 mm
ANGULAR: ± 2°

MATERIAL: IMPACT MODIFIED NYLON 6/6 HEAT STABILIZED

COLOR: GREY

AVERY DENNISON
FASTENER DIVISION
FITCHBURG, MA 01420 U.S.A.
TEL. 1-800-225-5913
FAX. 978-353-8157

DESCRIPTION: FIR TREE ON STRAP

STOCK NO. 10719-0

REV. D

5 4 3 2 1